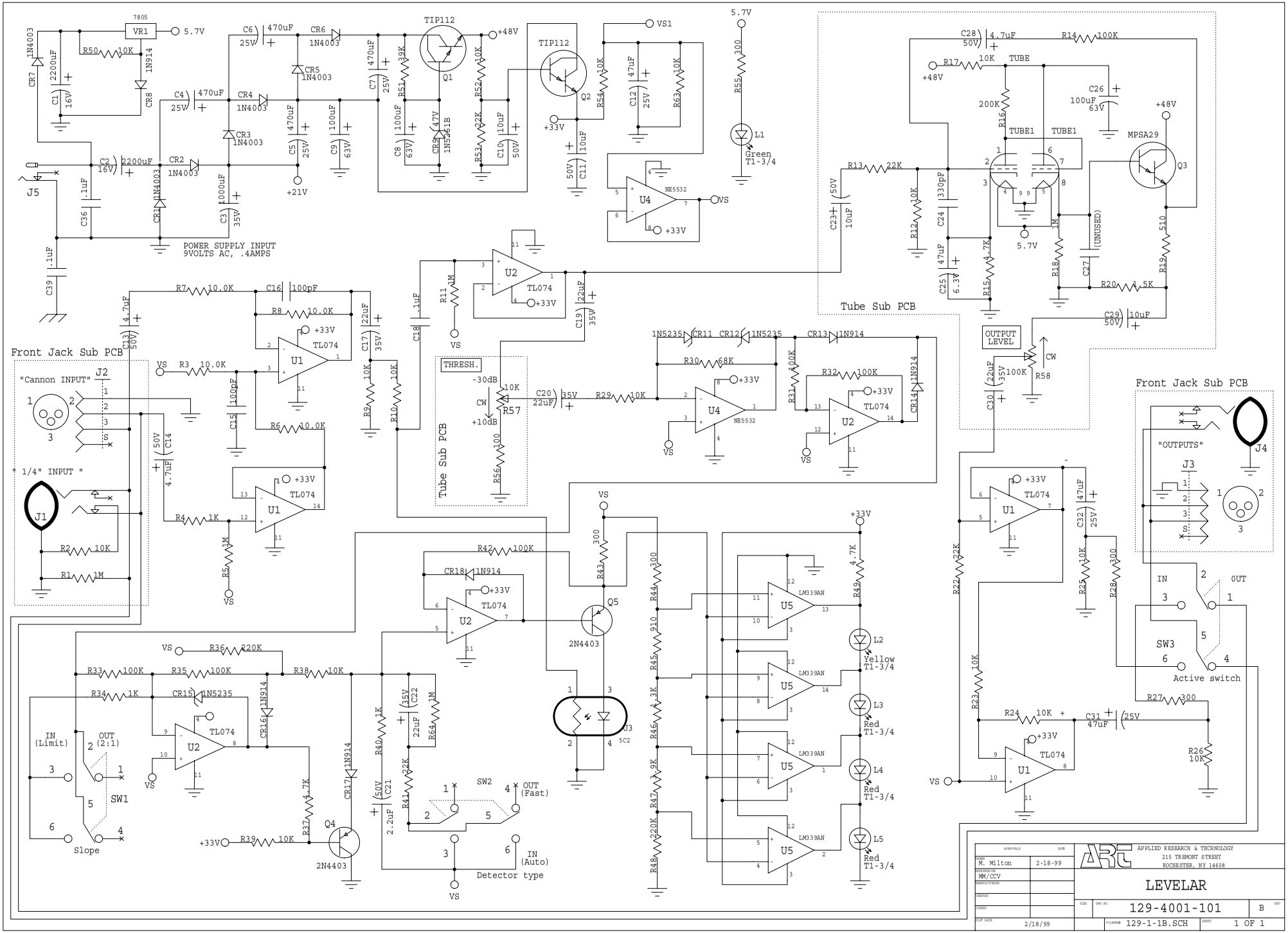
POWER SUPPLY INPUT
9VOLTS AC, .4AMPS
Front Jack Sub PCB
"Cannon INPUT"
" 1/4" INPUT "
Tube Sub PCB
THRESH.
OUTPUT LEVEL
Tube Sub PCB
Front Jack Sub PCB
"OUTPUTS"
Active switch
Slope
Detector type
IN (Limit)
OUT (2:1)
IN (Auto)
OUT (Fast)
Yellow T1-3/4
Red T1-3/4
Green T1-3/4
APPLIED RESEARCH & TECHNOLOGY
215 TREMONT STREET
ROCHESTER, NY 14608
LEVELAR
129-4001-101
B
129-1-1B.SCH
1 OF 1
2/18/99
M. Milton
2-18-99
MM/CCV